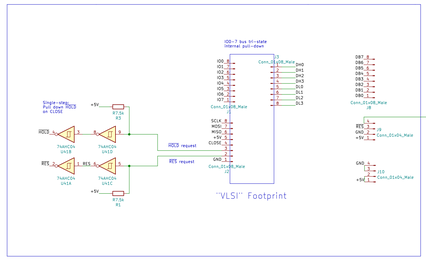

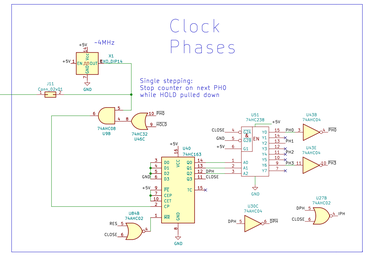

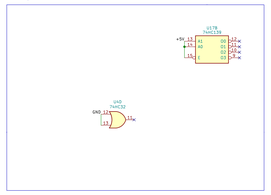

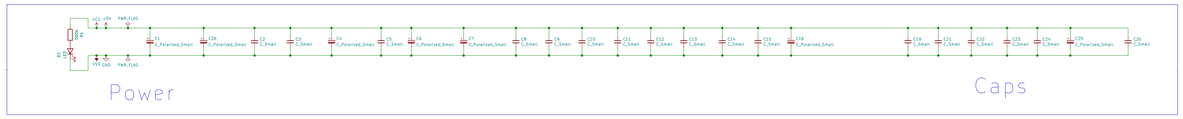
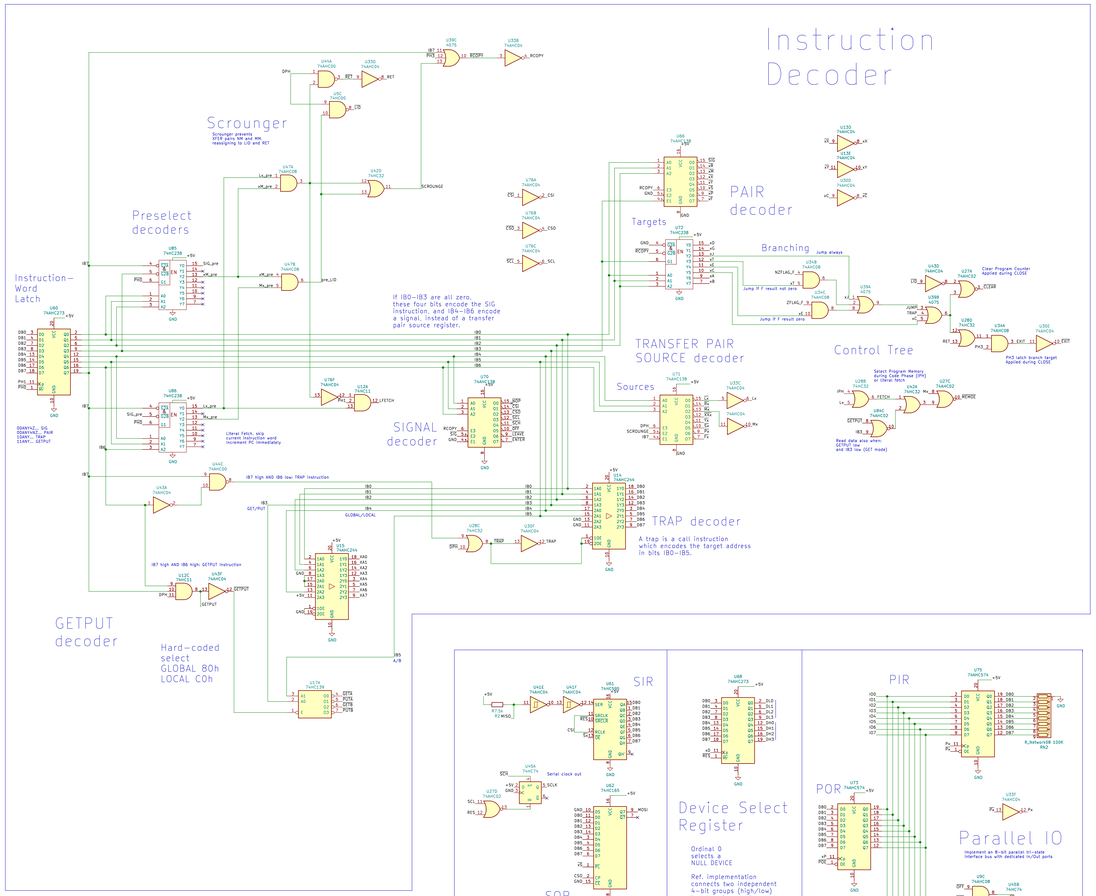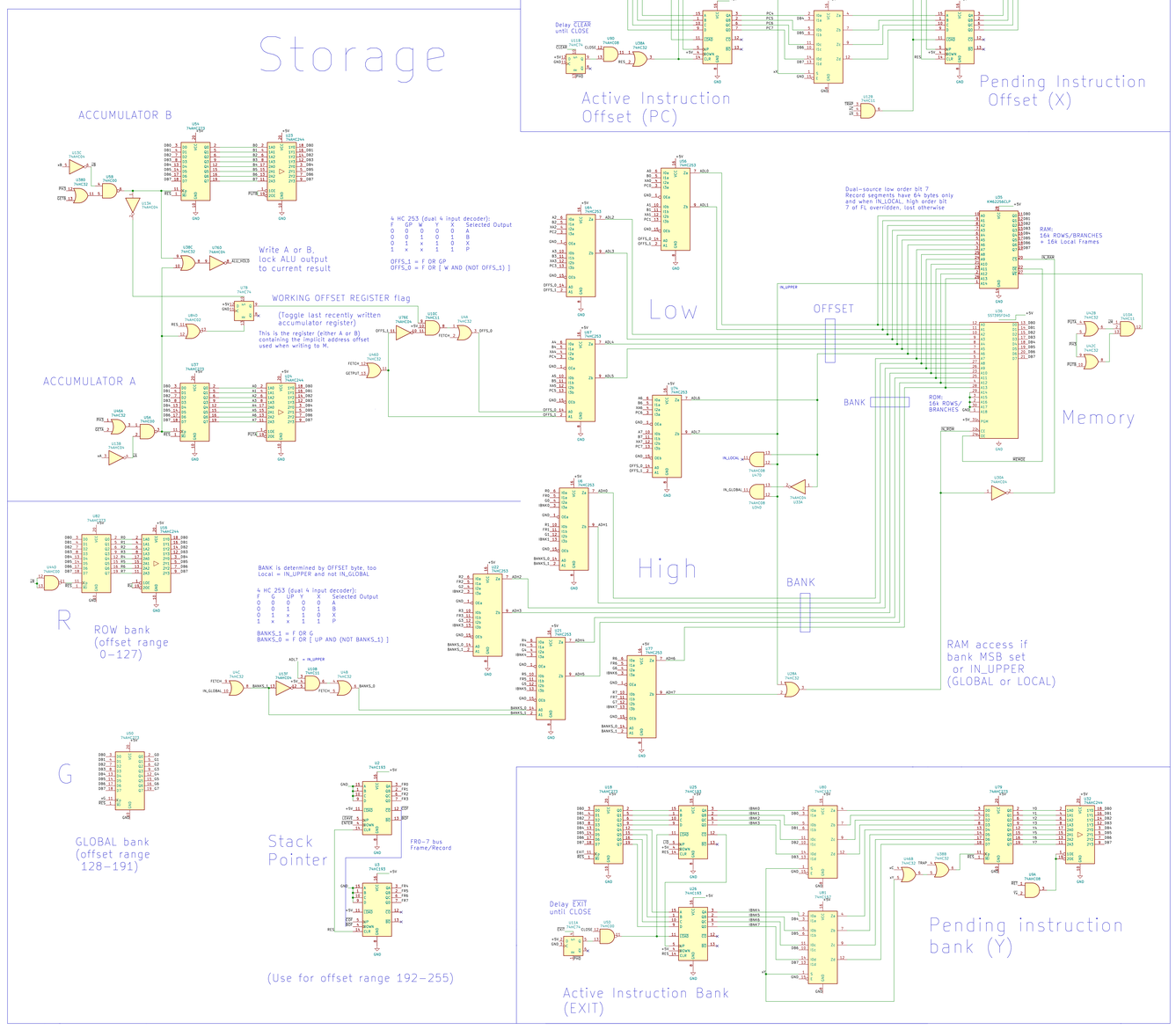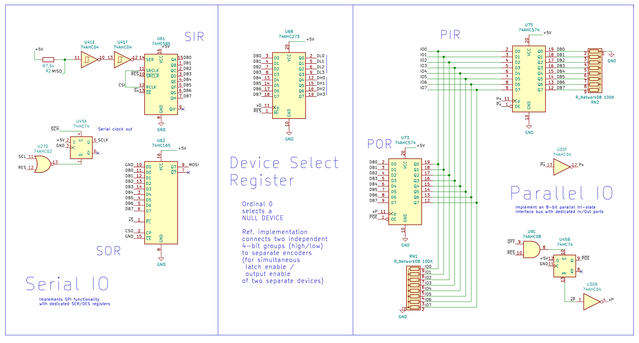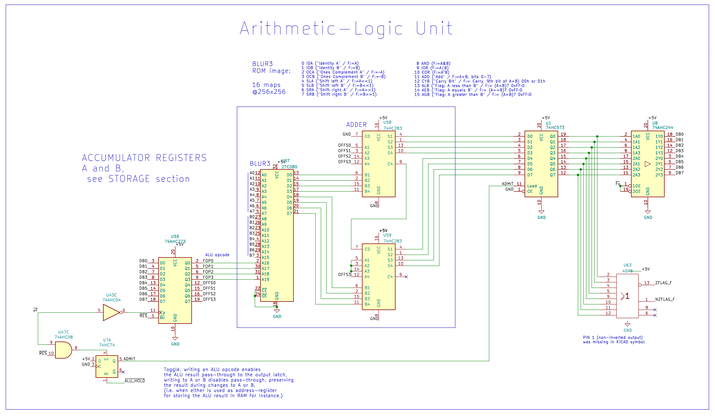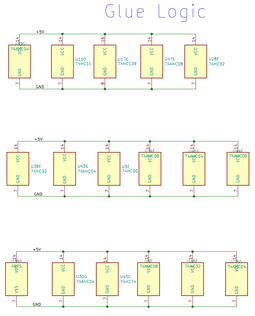
Sonne Microcontroller Discrete Reference Implementation rev. Abuladdin